Specialists in Gravimetric Blending & Controls

OPTIMIX 50

Advanced Dosing Solutions

TSM

Ingenieurbureau DR. BREHM AG

Service der zählt!

Benefits

- Faster Product Changes
- Continuous Homogeneous Mixing
- Increased Regrind Usage
- Product Consistency
- High Accuracy Dispensing up to 0.01% of batch

User Interface

- Intuitive Simple Operator Functionality
- Comprehensive Report/Alarm Management
- Built-in Trending & Data History Management
- Industry Standard Communication Protocols
- Material Usage / Inventory Statistics & Reports

50 OPTIONS

- Extrusion Control
- Flange Adapters
- Offline Blending
- Automatic Cleaning
- Integrated Material Handling

OPTI-MIX 50 Batch Blenders can accommodate up to four material components while providing throughput rates up to 50 kg/hr (110lb/hr). OPTI-MIX 50 utilizes TSM slide valve design and patented reverse-flight auger mixing technology. This combination provides superior accuracies, blend ratios and mixing homogeneity that is not achievable by competitive systems. All components are blended by weight, based on the preset blend ratios entered on the touch screen. Each component is metered separately into a single weigh hopper, which measures and controls their percentage.

Specialists in Gravimetric Blending & Controls

OPTIMIX 50

Advanced Dosing Solutions

BLENDER MODEL	STD. NO. OF COMPONENTS	MAXIMUM NO. OF COMPONENTS	STD. BATCH SIZE	STD. UNIT THROUGHPUT	EASY DRAIN	MAX. NO. OF SIDE FEEDERS	MAX MICRA-DOSE SIDE FEEDERS	MAX POWDER SIDE FEEDER (SEE NOTES)	MAX AUGER SIDE FEEDERS	LIQUID DOSING SIDE FEEDER	INTERNAL AUTO-CLEAN	BIN BLOW DOWN AUTO-CLEAN	MATERIAL BYPASS AUTO-CLEAN	AUTO. EASY-DRAIN	AUTO. EASY-DRAIN
OPTI-MIX 50	4	6	.5kg	110 lb/hr / 50 kg/hr	No	2	2	2	2	N/A	N/A	N/A	N/A	N/A	N/A

Environmental

Blender Weight	(kg / lb)	50 / 110
Max Material Temp	(ºC / ºF)	70 / 158
Max Optional Material Temp	(ºC / ºF)	130 / 266
I Mix Chamber Discharge Hole	(mm / ")	50 / 2.0

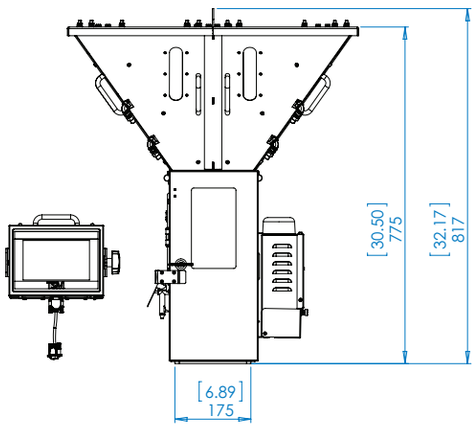

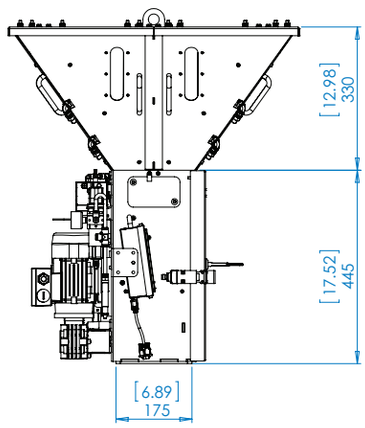

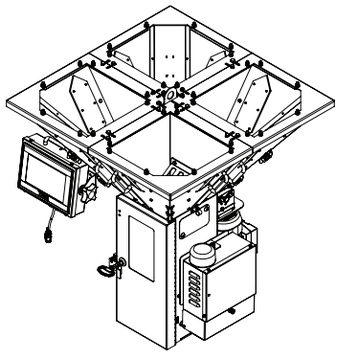

European Office (Headquarters)

TSM
Ard Easmuinn, Dundalk,
Co. Louth, Ireland.

Tel: +353-42-9335560

General Info:
Info@tsm-controls.com
Sales:
sales@tsm-controls.com
Support:
service@tsm-controls.com

North America Regional Offices

TSM Inc.
1505 Johnson Ferry Road
Marietta, GA 30062, USA.

TSM Inc.
1404 Joliet Road,
Romeoville, IL 60446, USA.

Tel: (770) 886-6630

General Info:
Info@us.tsm-controls.com
Sales:
sales@us.tsm-controls.com
Support:
service@us.tsm-controls.com

Asia-Pacific Regional Office

TSM Taiwan
Taichung City, Taiwan,

Tel: +886-4-24728185

General Info:
info@tsm-controls.com.tw
Sales:
sales@tsm-controls.com.tw
Support:
service@tsm-controls.com.tw

China Regional Office

TSM China
Room 2423, IPC Center, No. 983,
East HuangPu AVE, HuangPu District,
GuangZhou City 510000, China.

Tel: +86-139-25062596

General Info:
china@tsm-controls.com
Sales:
china@tsm-controls.com
Support:
china@tsm-controls.com